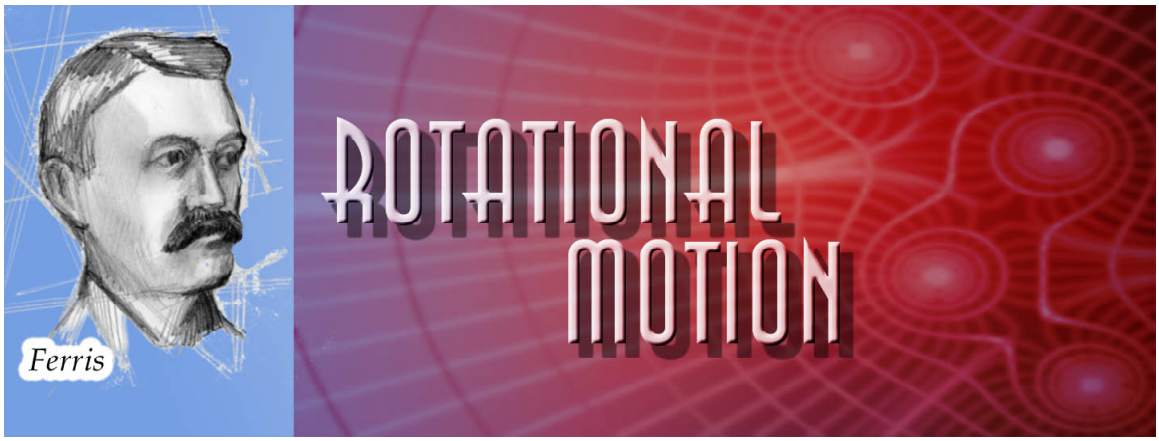

The Big Idea

The third conservation law is *conservation of angular momentum*. This can be roughly understood as spin, more accurately it is rotational velocity multiplied by rotational inertia. In any closed system (including the universe) the quantity of angular momentum is fixed. Angular momentum can be transferred from one body to another but cannot be lost or gained. If a system has its angular momentum changed from the outside it is caused by a torque multiplied by time of impact. Torque is a force applied at a distance from the center of rotation.

Key Concepts

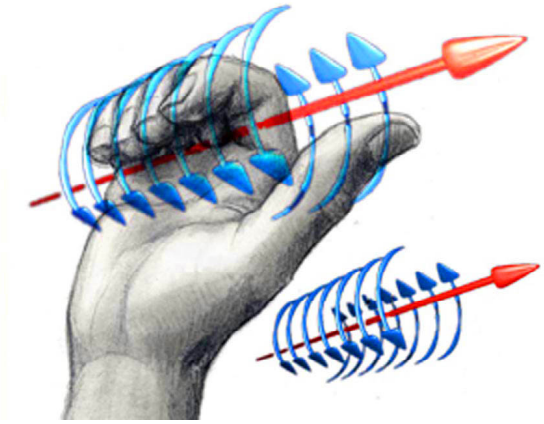

- To determine the *rotation axis*, wrap your right hand fingers in the direction of rotation and your thumb points along the axis (see figure).
- When something rotates in a circle, it moves through a *position angle* θ that runs from 0 to 2π radians and starts over again at 0. The physical distance d it moves is called the *path length*. If the radius of the circle is larger, the distance traveled is larger.
- How quickly the position angle θ changes with time determines the angular velocity ω. The direction of angular velocity is either clockwise or counterclockwise. How quickly the angular velocity changes determines the angular acceleration α.
- The linear velocity **v** and linear acceleration also depend on the radius of rotation, which is called the *moment arm* r (See figure below.)
- If something is spinning, it moves more quickly if it is farther from the center of rotation. For instance, people at the Earth's equator are physically moving faster than people at northern latitudes, even though their day is still 24 hours long – this is because they have a greater circumference to travel in the same amount of time.

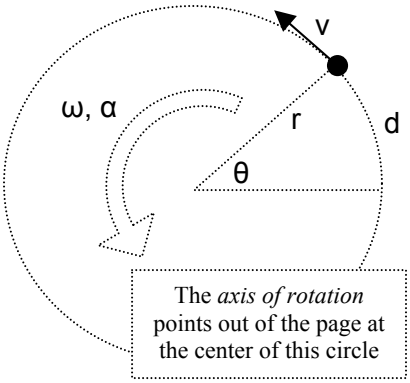

- There are analogies to the "Big Three" equations that work for rotational motion just like they work for linear motion.
- As before: once you have the acceleration you can predict the motion. Just as linear accelerations are caused by forces, angular accelerations are caused by *torques*.
- **Torques** produce angular accelerations, but just as masses resist acceleration (due to inertia), there is an inertia that opposes angular acceleration. The measure of this inertial resistance depends on the mass, but more importantly on the distribution of the mass in the body. **The *moment of inertia*, I, is the rotational version of mass.** Values for the moment of inertia of common objects are given in problem 2. Torques have only two directions: those that produce clockwise (CW) and those that produce counterclockwise (CCW) rotations. The angular acceleration or change in ω would be in the direction of the torque.

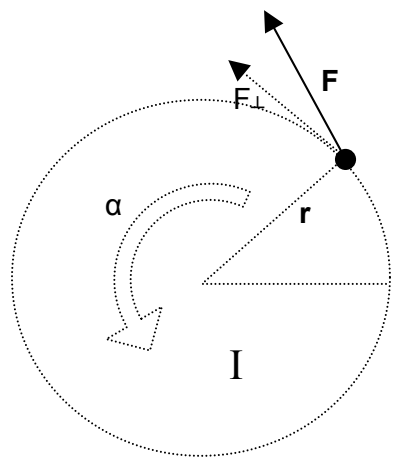

- Imagine spinning a fairly heavy disk. To make it spin, you don't push *towards* the disk center– that will just move it in a straight line. To spin it, you need to push along the side, much like when you spin a basketball. Thus, the *torque* you exert on a disk to make it accelerate depends only on the component of the force perpendicular to the radius of rotation: $\tau = rF_{\perp}$.
- Moment of Inertia is equivalent to mass for rotational motion. The larger the moment of inertia (symbol I) the harder it is to rotate. The moment of inertia is equal to the mass multiplied by the distance of the mass to the rotational axis SQUARED. The fact that the distance is squared means that mass at farther distances from the rotational axis is weighted much more than mass close to it.
- Many separate torques can be applied to an object. The angular acceleration produced is $\boldsymbol{\alpha} = \boldsymbol{\tau}_{net} / I$.
- The *angular momentum* of a spinning object is $L = I\omega$. Torques produce a change in angular momentum with time: $\boldsymbol{\tau} = \Delta \mathbf{L}/\Delta t$
- Spinning objects have a kinetic energy, given by $K = ½I\omega^2$.

Table of Analogies		
Linear motion	*Rotational motion*	*Rotational unit*
x	θ	radians
v	ω	radians/second
a	α	radians/second^2
F	τ	Meter-Newton·
m	I	kg·meters^2
$\mathbf{a} = \mathbf{F}_{net} / m$	$\boldsymbol{\alpha} = \boldsymbol{\tau}_{net} / I$	Radians/sec²
$\mathbf{p} = m\mathbf{v}$	$\mathbf{L} = I\boldsymbol{\alpha}$	kg·meters^2/sec
$\mathbf{F} = \Delta\mathbf{p}/\Delta t$	$\boldsymbol{\tau} = \Delta\mathbf{L}/\Delta t$	Meter-Newton
$K = ½mv^2$	$K = ½I\omega^2$	Joules

Key Equations (These are simpler than they look: many are familiar equations in new "rotational" language!)

- $d = r\Delta\theta$; the path length along an arc is equal to the radius of the arc times the angle through which the arc passes
- $v = r\omega \quad (\omega = \Delta\theta/\Delta t)$; the linear velocity of an object in rotational motion is the radius of rotation times the angular velocity
- $a = r\alpha \quad (\alpha = \Delta\omega/\Delta t)$; the linear acceleration of an object in rotational motion is the radius of rotation times the angular acceleration; this is *in* the direction of motion
- $a_C = -mv^2/r = -r\omega^2$; the centripetal acceleration of an object in rotational motion depends on the radius of rotation and the angular speed; the sign reminds us that it points inward towards the center of the circle; this is just mv^2/r!
- $\omega = 2\pi/T$; angular velocity and period are simply related
- $\theta(t) = \theta_0 + \omega_0 t + \frac{1}{2}\alpha t^2$; the 'Big Three' equations work for rotational motion too!
- $\omega(t) = \omega_0 + \alpha t$
- $\omega^2 = \omega_0^2 + 2\alpha(\Delta\theta)$
- $\boldsymbol{\alpha} = \boldsymbol{\tau}_{net} / I$; angular accelerations are produced by net torques, with inertia opposing acceleration; this is the rotational analog of $\mathbf{a} = \mathbf{F}_{net} / m$
- $\boldsymbol{\tau}_{net} = \sum \boldsymbol{\tau}_{\text{all individual forces}} = I\boldsymbol{\alpha}$; the net torque is the vector sum of all the torques acting on the object. When adding torques it is necessary to subtract CW from CCW torques.
- $\boldsymbol{\tau} = \mathbf{r}\times\mathbf{F} = r_\perp F = rF_\perp$; individual torques are determined by multiplying the force applied by the *perpendicular* component of the moment arm
- $L = I\alpha$; angular momentum is the product of moment of inertia and angular velocity.
- $\boldsymbol{\tau} = \Delta\mathbf{L}/\Delta t$; torques produce changes in angular momentum; this is the rotational analog of $\mathbf{F} = \Delta\mathbf{p}/\Delta t$
- $K = \frac{1}{2}I\omega^2$; angular motion counts for kinetic energy as well!

Rotational Motion Problem Set

1. The wood plug, shown below, has a lower moment of inertia than the steel plug because it has a lower mass.

a. Which of these plugs would be easier to spin on its axis? Explain.

Even though they have the same mass, the plug on the right has a higher moment of inertia (I), than the plug on the left, since the mass is distributed at greater radius.

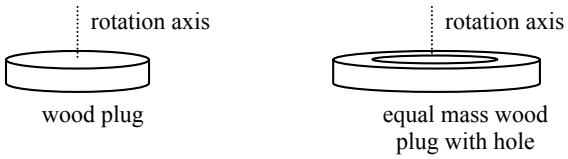

b. Which of the plugs would have a greater angular momentum if they were spinning with the same angular velocity? Explain.

2. Here is a table of some moments of inertia of commonly found objects:

Object	*Drawing*	*Moment of Inertia*
Disk (rotated about center)	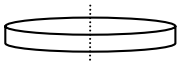	$\frac{1}{2}MR^2$
Ring (rotated about center)	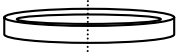	MR^2
Rod or plank (rotated about center)	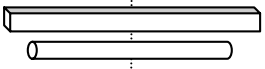	$^1/_{12}ML^2$
Rod or plank (rotated about end)		$^1/_3ML^2$
Sphere		$^2/_5MR^2$
Satellite	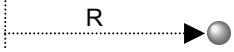	MR^2

a. Calculate the moment of inertia of the Earth about its spin axis.
b. Calculate the moment of inertia of the Earth as it revolves around the Sun.
c. Calculate the moment of inertia of a hula hoop with mass 2 kg and radius 0.5 m.
d. Calculate the moment of inertia of a rod 0.75 m in length and mass 1.5 kg rotating about one end.
e. Repeat d., but calculate the moment of inertia about the center of the rod.

3. Imagine standing on the North Pole of the Earth as it spins. You would barely notice it, but you would turn all the way around over 24 hours, without covering any real distance. Compare this to people standing on the equator: they go all the way around the entire circumference of the Earth every 24 hours! Decide whether the following statements are TRUE or FALSE. Then, explain your thinking.

   a. The person at the North Pole and the person at the equator rotate by 2π radians in 86,400 seconds.
   b. The angular velocity of the person at the equator is $2\pi/86400$ radians per second.
   c. Our angular velocity in San Francisco is $2\pi/86400$ radians per second.
   d. Every point on the Earth travels the same distance every day.
   e. Every point on the Earth rotates through the same angle every day.
   f. The angular momentum of the Earth is the same each day.
   g. The angular momentum of the Earth is $^2/_5MR^2\omega$.
   h. The rotational kinetic energy of the Earth is $^1/_5MR^2\omega^2$.
   i. The *orbital* kinetic energy of the Earth is $^1/_2MR^2\omega^2$, where R refers to the distance from the Earth to the Sun.

4. You spin up some pizza dough from rest with an angular acceleration of 5 rad/s^2.

   a. How many radians has the pizza dough spun through in the first 10 seconds?
   b. How many times has the pizza dough spun around in this time?
   c. What is its angular velocity after 5 seconds?
   d. What is providing the torque that allows the angular acceleration to occur?
   e. Calculate the moment of inertia of a flat disk of pizza dough with mass 1.5 kg and radius 0.6 m.
   f. Calculate the rotational kinetic energy of your pizza dough at $t = 5$ s and $t = 10$ s.

5. Your bike brakes went out! You put your feet on the wheel to slow it down. The rotational kinetic energy of the wheel begins to decrease. Where is this energy going?

6. Consider hitting someone with a Wiffle ball bat. Will it hurt them more if you grab the end or the middle of the bat when you swing it? Explain your thinking, but do so using the vocabulary of *moment of inertia* (treat the bat as a rod), *angular momentum* (imagine the bat swings down in a semi-circle), and *torque* (in this case, torques caused by the contact forces the other person's head and the bat are exerting on each other).

7. Why does the Earth keep going around the Sun? Shouldn't we be spiraling farther and farther downward towards the Sun, eventually falling into it? Why do low-Earth satellites eventually spiral down and burn up in the atmosphere, while the Moon never will?

8. If most of the mass of the Earth were concentrated at the core (say, in a ball of dense iron), would the moment of inertia of the Earth be higher or lower than it is now? (Assume the total mass stays the same.)

9. Two spheres of the same mass are spinning in your garage. The first is 10 cm in diameter and made of iron. The second is 20 cm in diameter but is a thin plastic sphere filled with air. Which is harder to slow down? Why? (And why are two spheres spinning in your garage?)

10. A game of tug-o-war is played … but with a twist (ha!). Each team has its own rope attached to a merry-go-round. One team pulls clockwise, the other counterclockwise. Each pulls at a different point and with a different force, as shown.

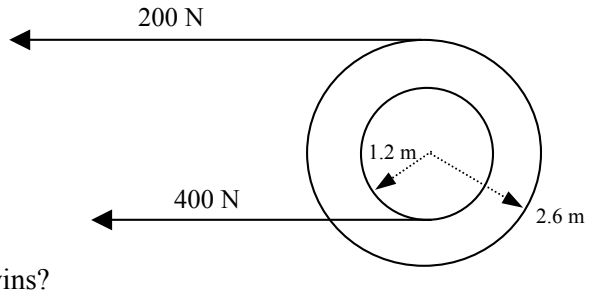

a. Who wins?
b. By how much? That is, what is the net torque?
c. Assume that the merry-go-round is weighted down with a large pile of steel plates. It is so massive that it has a moment of inertia of 2000 kg·m^2. What is its angular acceleration?
d. How long will it take the merry-go-round to spin around once completely?

11. You have two coins; one is a standard U.S. quarter, and the other is a coin of equal mass and size, but with a hole cut out of the center.

a. Which coin has a higher moment of inertia?
b. Which coin would have the greater angular momentum if they are both spun at the same angular velocity?

12. A wooden plank is balanced on a pivot, as shown below. Weights are placed at various places on the plank.

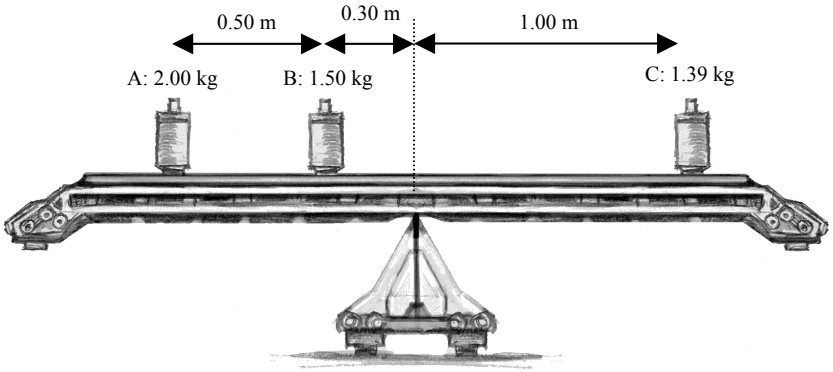

Consider the torque on the plank caused by weight A.

a. What force, precisely, is responsible for this torque?
b. What is the magnitude (value) of this force, in Newtons?
c. What is the moment arm of the torque produced by weight A?
d. What is the magnitude of this torque, in N·m?
e. Repeat parts (a – d) for weights B and C.
f. Calculate the net torque. Is the plank balanced? Explain.

13. A star is rotating with a period of 10.0 days. It collapses with no loss in mass to a white dwarf with a radius of .001 of its original radius.

a. What is its initial angular velocity?
b. What is its angular velocity after collapse?

14. For a ball rolling without slipping with a radius of 0.10 m, a moment of Inertia of 25.0 kg-m^2, and a linear velocity of 10.0 m/s calculate the following:

a. the angular velocity
b. the rotational kinetic energy
c. the angular momentum
d. the torque needed to double its linear velocity in 0.2 sec

15. A merry-go-round consists of a uniform solid disc of 225 kg and a radius of 6.0 m. A single 80 kg person stands on the edge when it is coasting at 0.20 revolutions /sec. How fast would the device be rotating after the person has walked 3.5 m toward the center. (The moments of inertia of compound objects add.)

16. In the figure we have a horizontal beam of length, L, pivoted on one end and supporting 2000 N on the other. Find the tension in the supporting cable, which is at the same point at the weight and is at an angle of 30 degrees to the vertical. Ignore the weight of the beam.

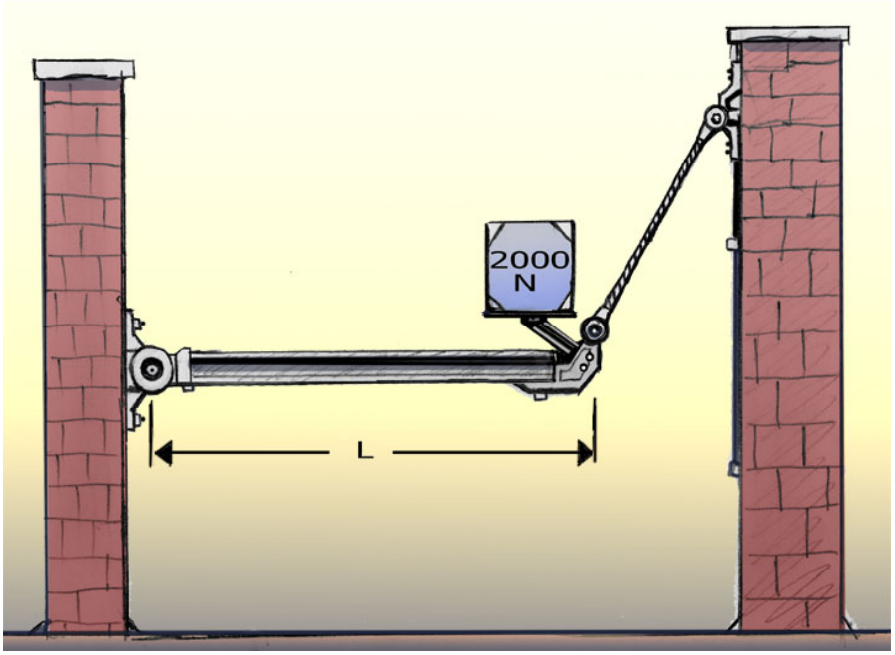

17. Two painters are on the fourth floor of a Victorian house on a scaffold, which weighs 400 N. The scaffold is 3.00 m long, supported by two ropes, each located 0.20 m from the end of the scaffold. The first painter of mass 75.0 kg is standing at the center; the second of mass, 65.0 kg, is standing 1.00 m from one end.

a. Draw a free body diagram, showing all forces and all torques. (Pick one of the ropes as a pivot point.)
b. Calculate the tension in the two ropes
c. Calculate the moment of inertia for rotation around the pivot point, which is supported by the rope with the least tension. (This will be a compound moment of inertia made of three components.)
d. Calculate the instantaneous angular acceleration assuming the rope of greatest tension breaks.

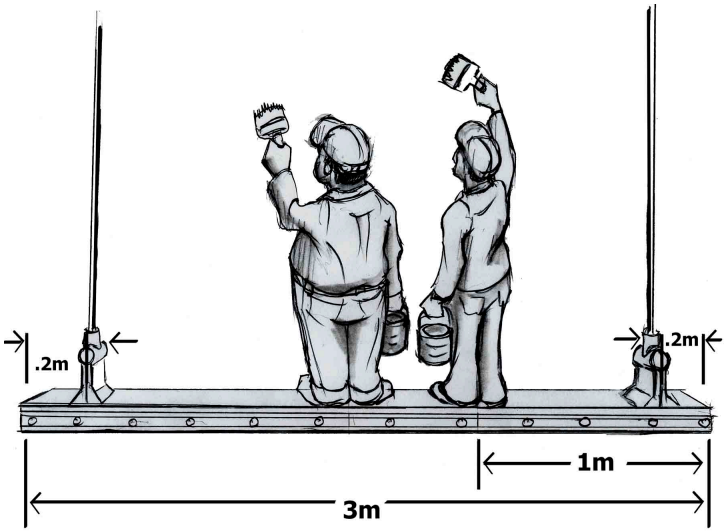

18. A horizontal 60 N beam. 1.4 m in length has a 100 N weight on the end. It is supported by a cable, which is connected to the horizontal beam at an angle of 37 degrees at 1.0 m from the wall. Further support is provided by the wall hinge, which exerts a force of unknown direction but which has a vertical (friction) component and a horizontal (normal) component.

a. Find the tension in the cable
b. Find the two components of the force on the hinge (magnitude and direction)
c. Find the coefficient of friction of wall and hinge.

19. There is a uniform rod of mass 2.0 kg of length 2.0 m. It has a mass of 2.6 kg at one end. It is attached to the ceiling .40 m from the end with the mass. The string comes in at a 53 degree angle to the rod.

a. Calculate the total torque on the rod.
b. Determine its direction of rotation
c. Explain, but don't calculate, what happens to the angular acceleration as it rotates toward a vertical position.

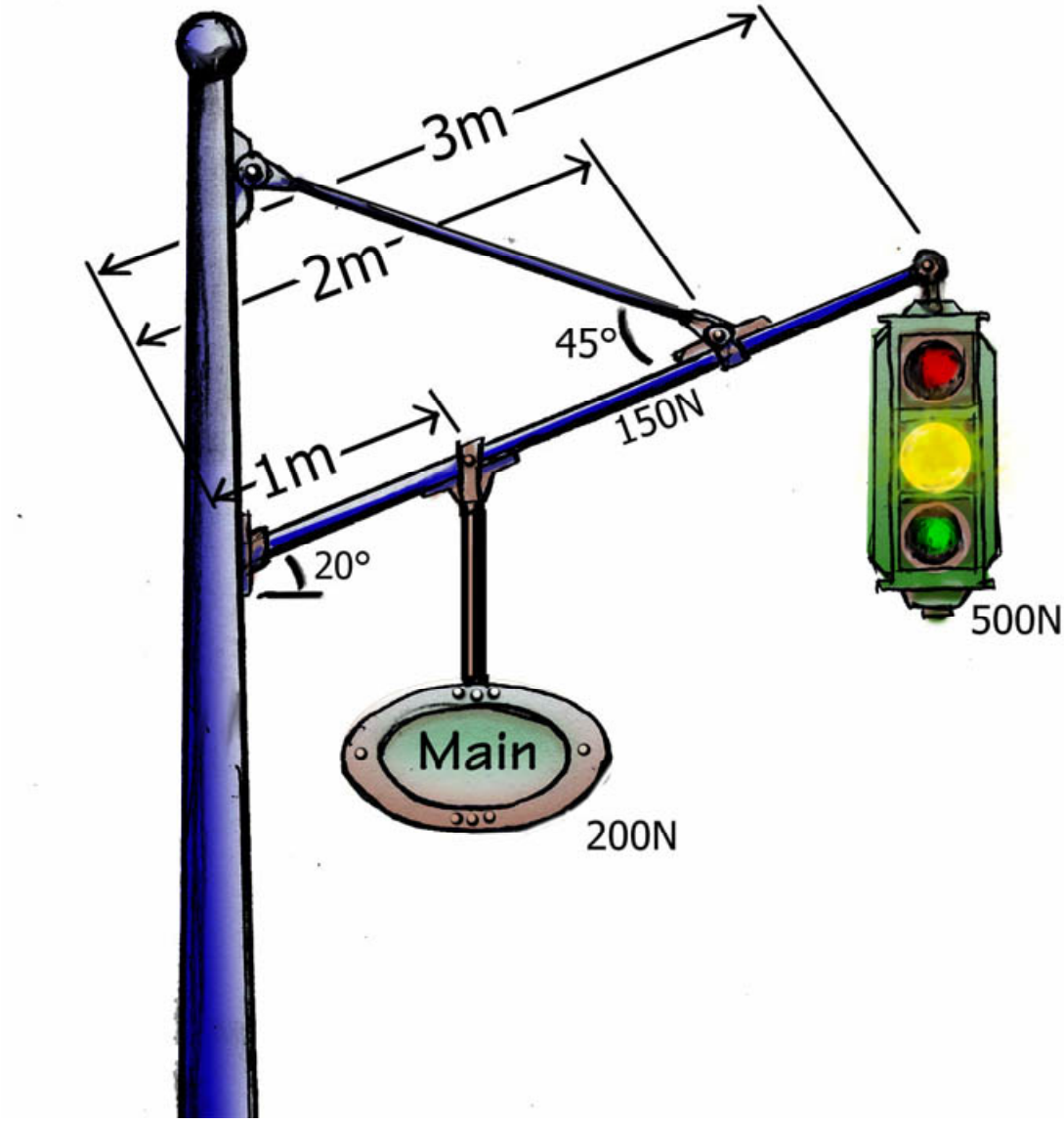

20. On a busy intersection a 3.00 m beam of 150 N is connected to a post at an angle upwards of 20.0 degrees to the horizontal. From the beam straight down hang a 200 N sign 1.00 m from the post and a 500 N signal light at the end of the beam. The beam is supported by a cable which connects to the beam 2.00 m from the post at an angle of 45.0 degrees measured from the beam; also by the hinge to the post which has horizontal and vertical components of unknown direction.

    a. Find the tension in the cable
    b. Find the magnitude and direction of the horizontal and vertical forces on the hinge.
    c. Find the total moment of inertia around the hinge as the axis.
    d. Find the instantaneous angular acceleration of the beam if the cable were to break.

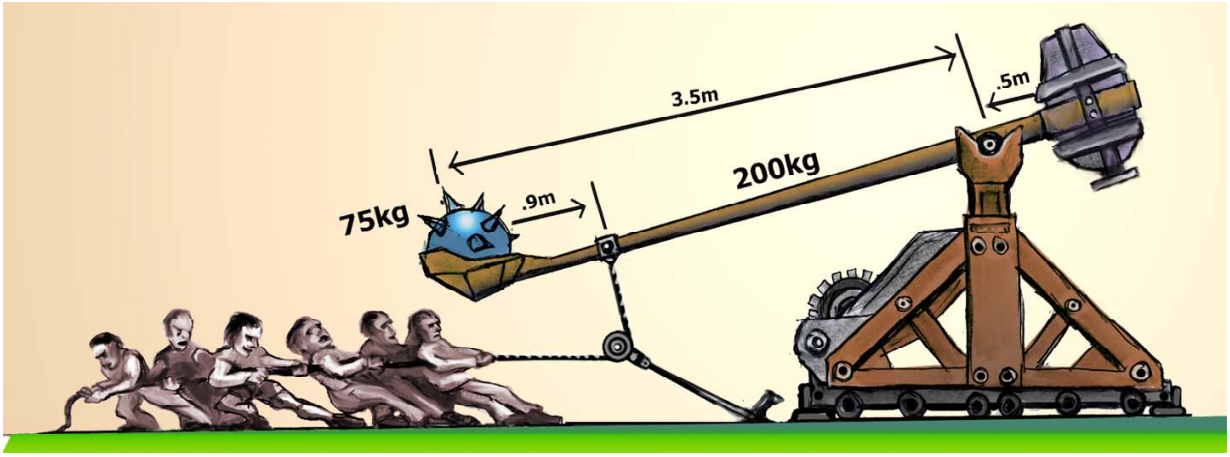

21. The medieval catapult consists of a 200 kg beam with a heavy ballast at one end and a projectile of 75.0 kg at the other end. The pivot is located 0.5 m from the ballast and a force with a downward component of 550 N is applied by prisoners to keep it steady until the commander gives the word to release it. The beam is 4.00 m long and the force is applied 0.900 m from the projectile end. Consider the situation when the beam is perfectly horizontal.

    a. Draw a free-body diagram labeling all torques
    b. Find the mass of the ballast
    c. Find the force on the horizontal support
    d. How would the angular acceleration change as the beam moves from the horizontal to the vertical position. (Give a qualitative explanation.)
    a. In order to maximize range at what angle should the projectile be released?
    b. What additional information and/or calculation would have to be done to determine the range of the projectile?

22. A bowling ball is thrown with an initial speed of 9m/s. Initially it slides along the lane without spinning, but eventually catches and starts spinning. The coefficient of kinetic friction between the ball and the lane is 0.24.

    a. What is the balls linear acceleration and angular acceleration?
    b. How long until the ball starts spinning without slipping? (hint: this occurs when $v=r\omega$)
    c. How far has the ball slid?
    d. What is its linear speed and angular speed when the ball begins smooth rolling (i.e. rolling without slipping)